Buttwelding ends
Butterfly valves

Series BW1 BW3

Identification
of the valve parts

Pos.	Description Item	Q.ty
1	Body	1
2	Butterfly	1
3	Seal retainer	1
4	Seal seat	1
5	Upper stem	1
6	Lower stem	1
7	Gland	1
8	Thrust washer	1
9	Stem seal	1
10	Gland screws	-
11	Bushing	-
12	Pins	3
13	Seal seat retainer screws	-
14	Lower thrust washer	1
15	Cap	1
16	Cap screws	-
17	Gasket	1
18	Seal surface	1

(*) Normally recommended spare parts
(–) Related to valve size

Section view

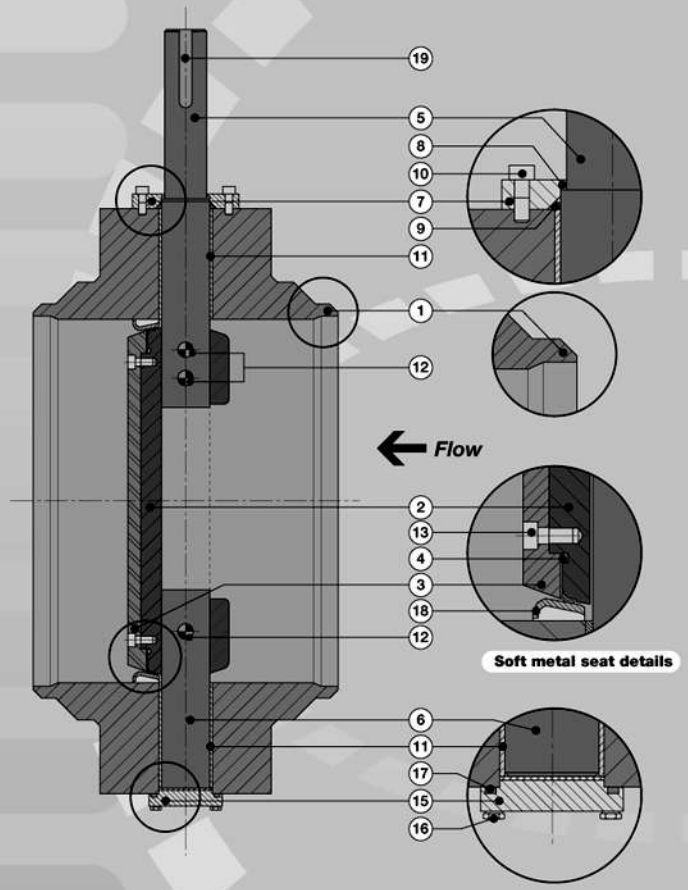

Soft metal seat details

Assembled views

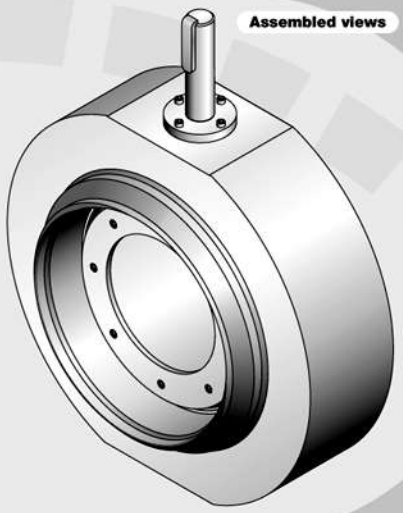

Assembly view
BW1

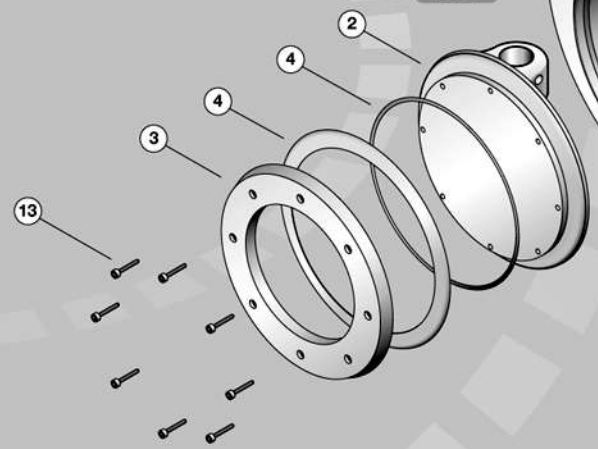
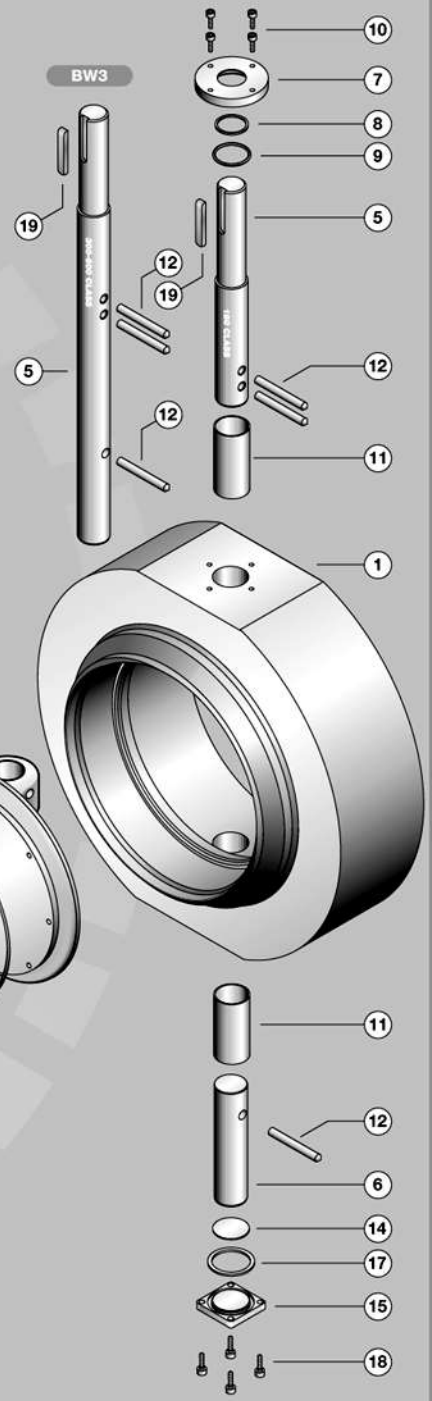
BW3